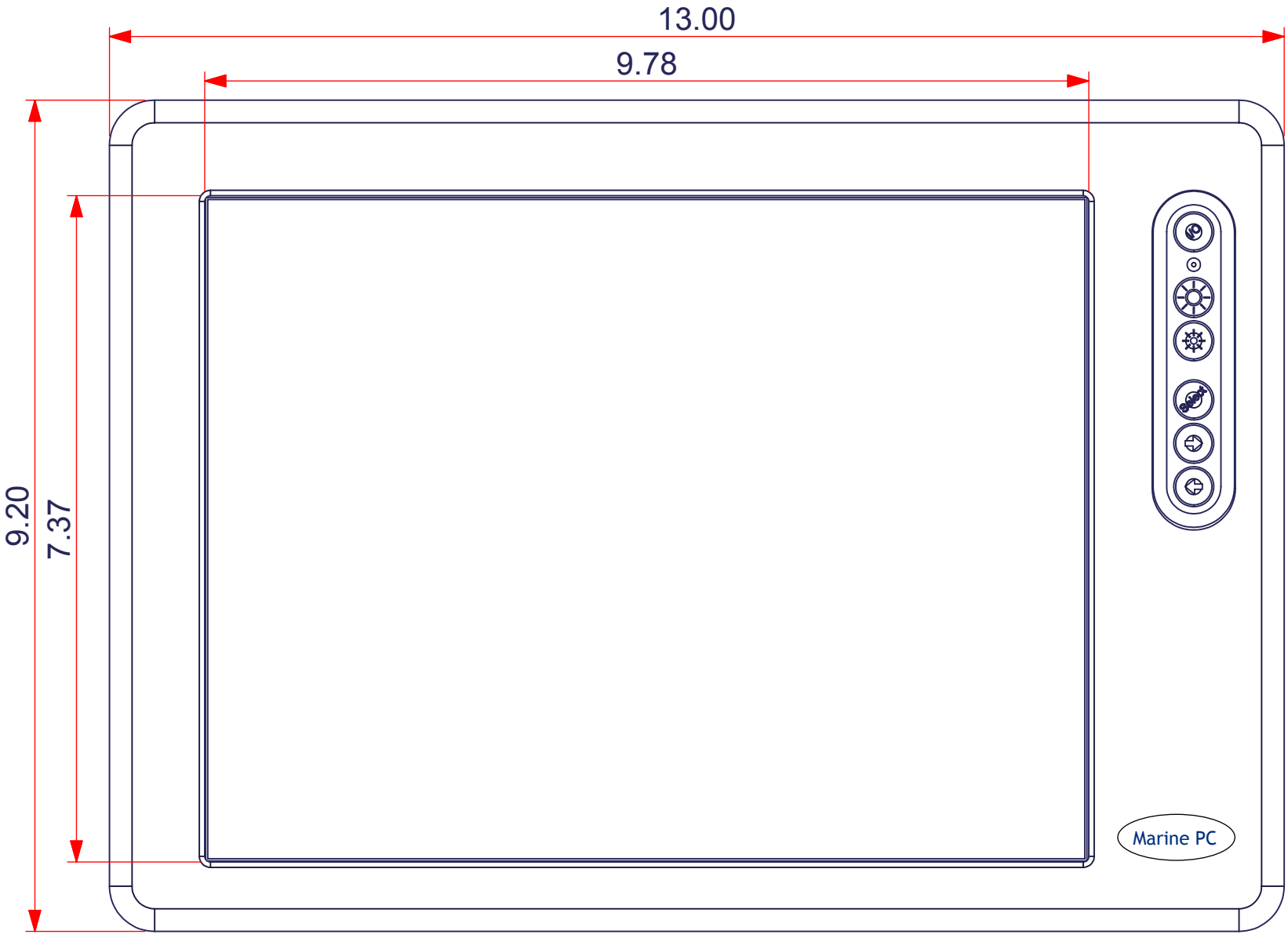
13.00
9.78
9.20
7.37
Marine PC

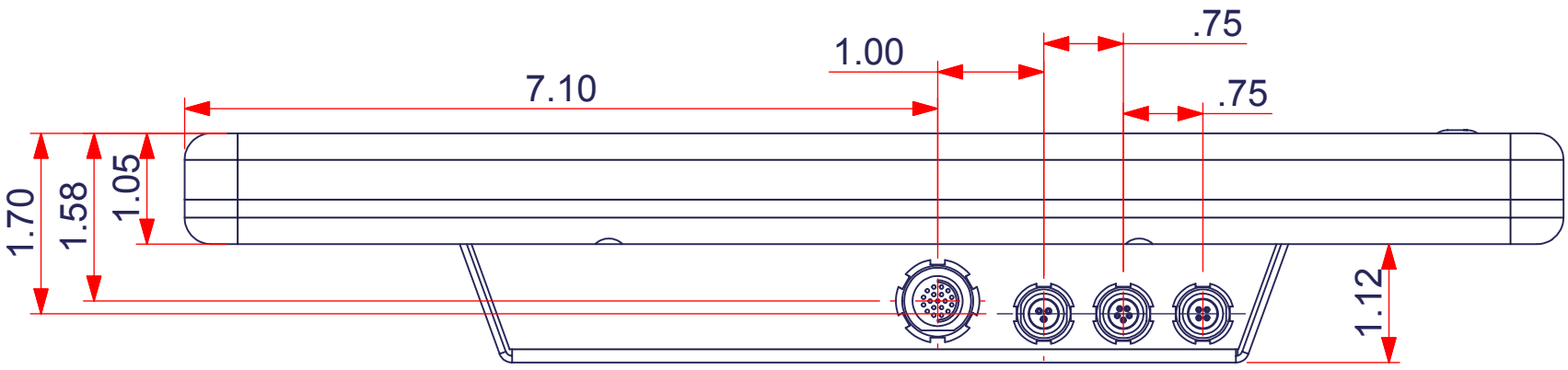
7.10
1.00
.75
.75
1.70
1.58
1.05
1.12

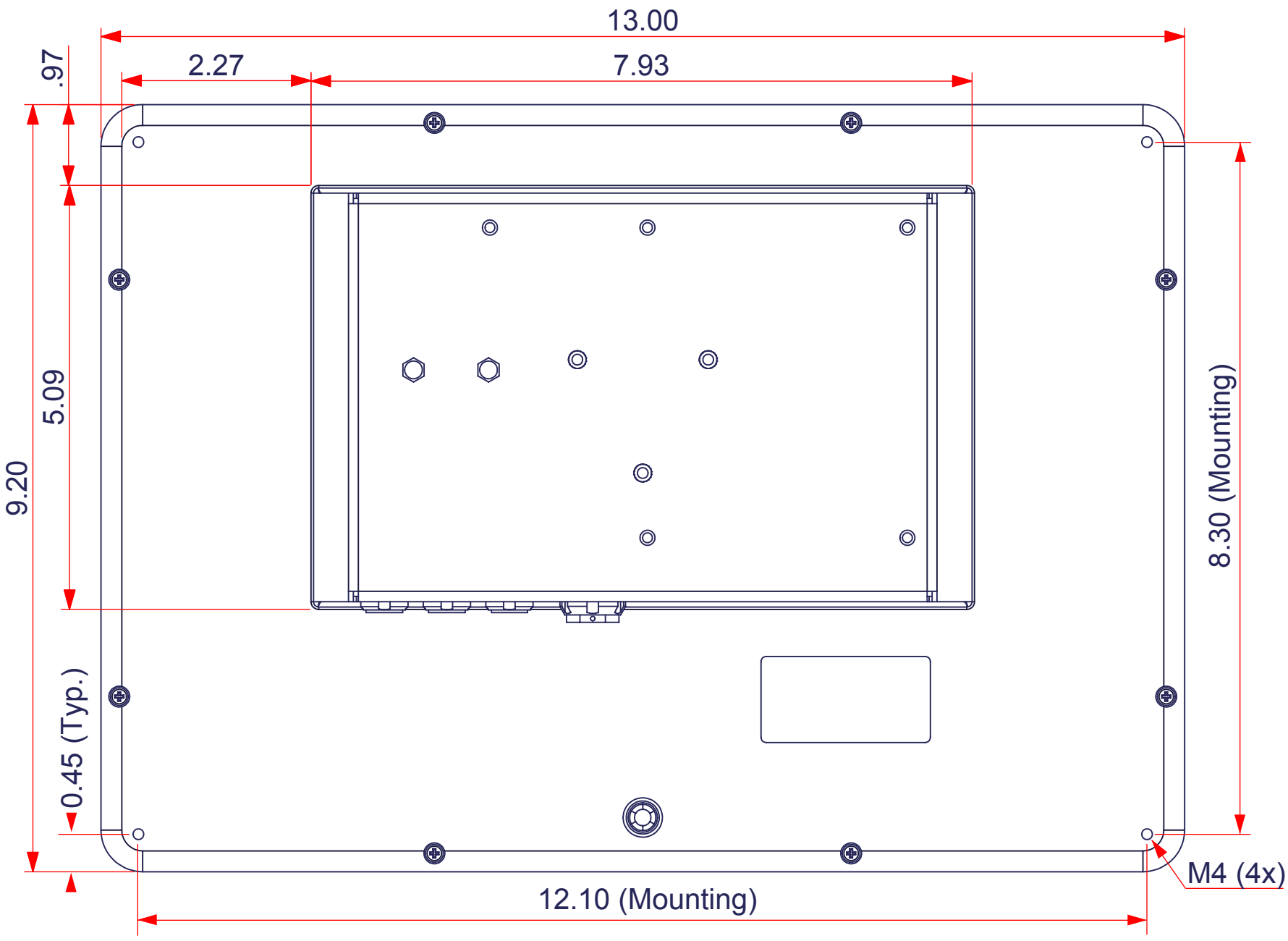
13.00
2.27
7.93
.97
5.09
9.20
0.45 (Typ.)
8.30 (Mounting)
12.10 (Mounting)
M4 (4x)