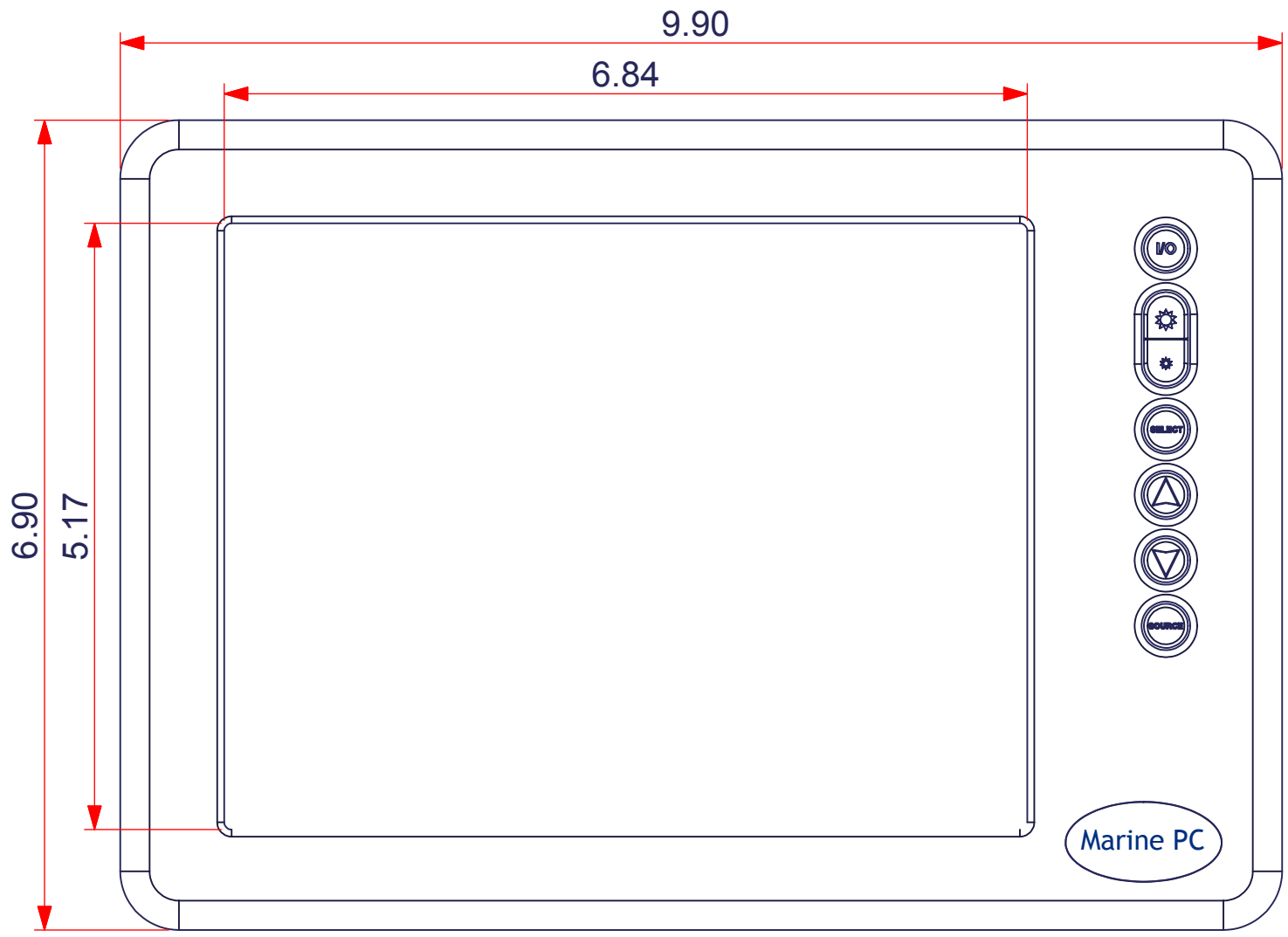
9.90
6.84
6.90
5.17
I/O
SELECT
SOURCE
Marine PC

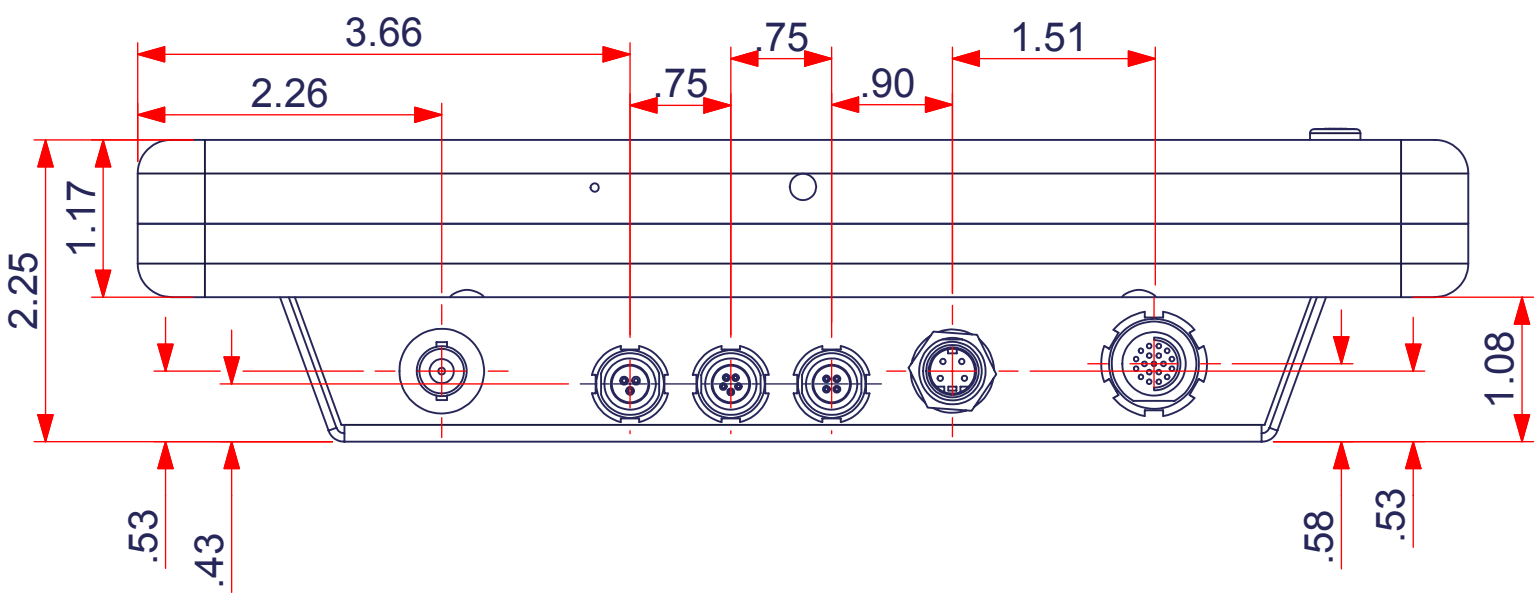
3.66
2.26
.75
.75
.90
1.51
2.25
1.17
1.08
.53
.43
.58
.53

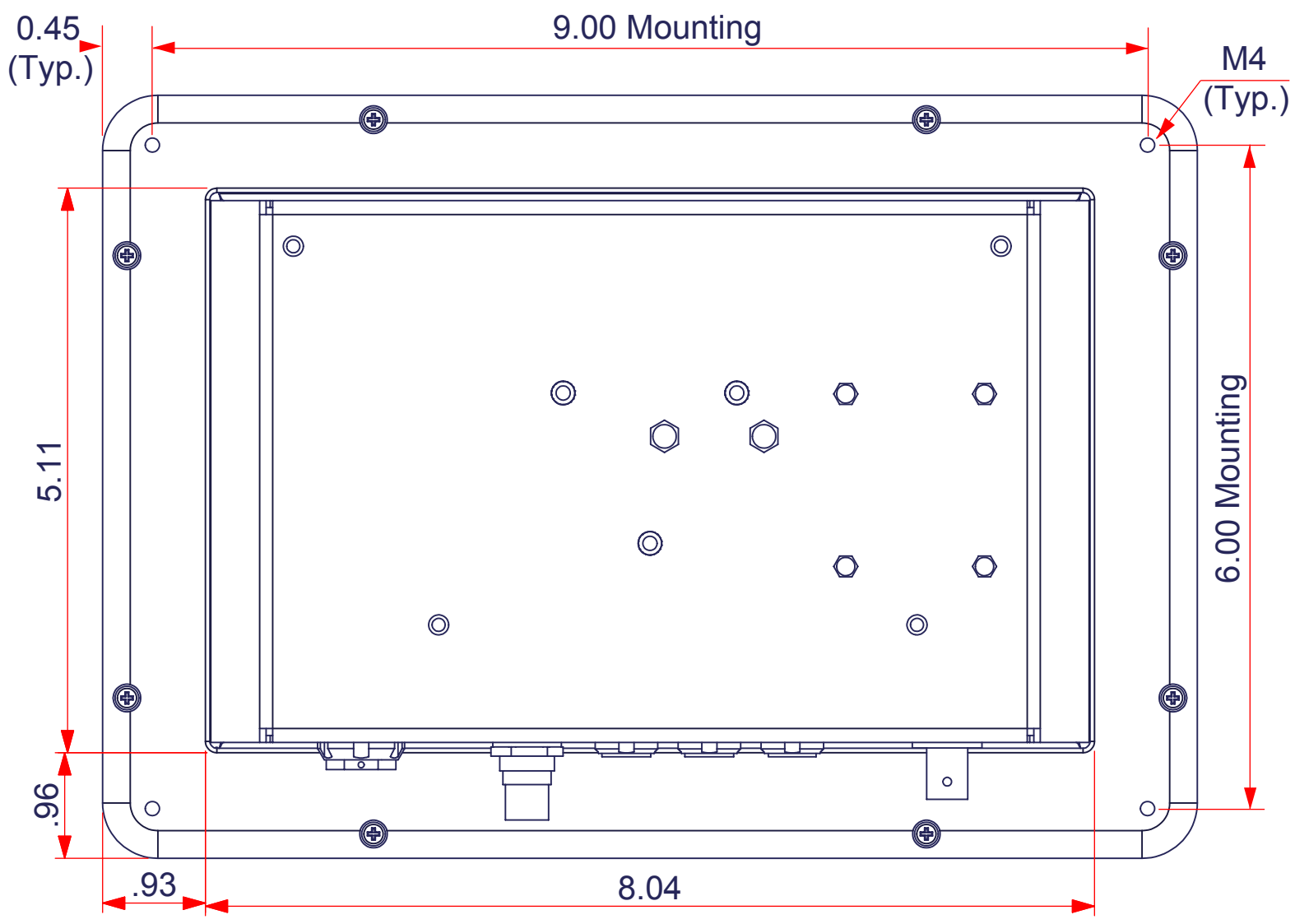
0.45
(Typ.)
9.00 Mounting
M4
(Typ.)
5.11
6.00 Mounting
.96
.93
8.04